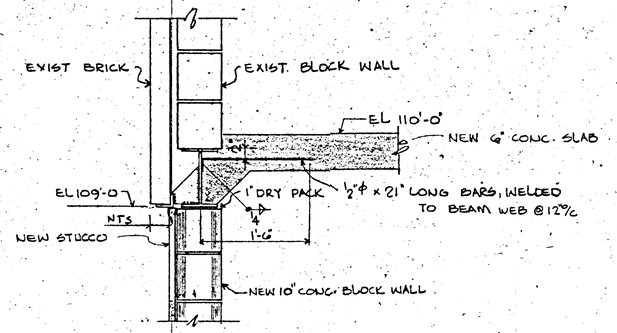

SECTION 1/S3
1" = 1'-0"

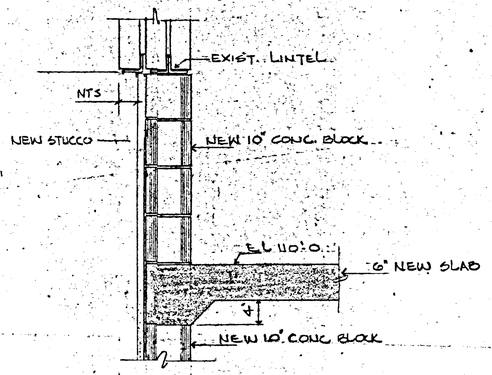

SECTION 2/S3
THRU BREECHING
1" = 1'-0"

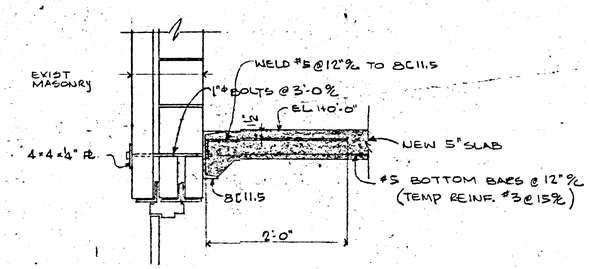

SECTION 3/S3
1" = 1'-0"

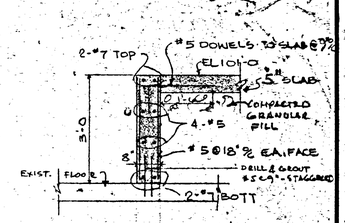

SECTION 8/S3
½" = 1'-0

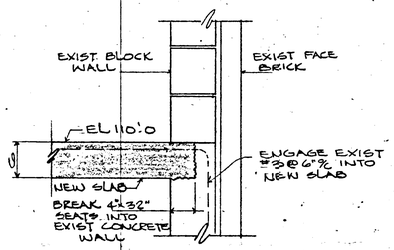

SECTION 4/S3
1" = 1'-0"

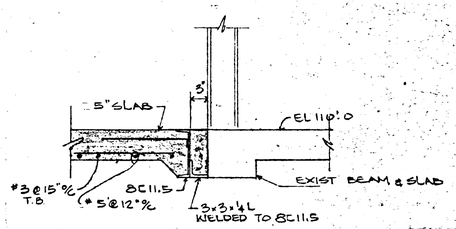

SECTION 5/S3
1" = 1'-0"

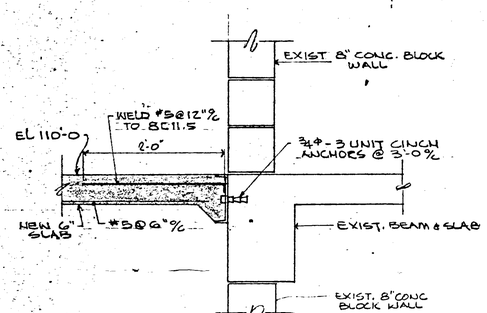

SECTION 6/S3
1" = 1'-0"

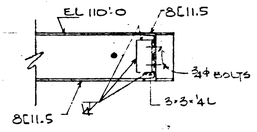

SECTION 7/S3
1" = 1'-0"
SHOWING E ASSEMBLY ONLY

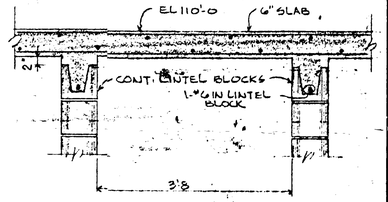

SECTION 12/S3
½" = 1'-0"

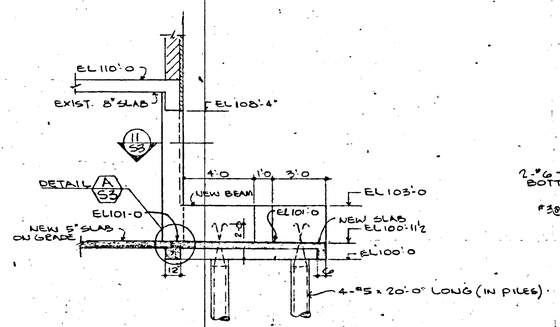

SECTION 9/S3
¼" = 1'-0"

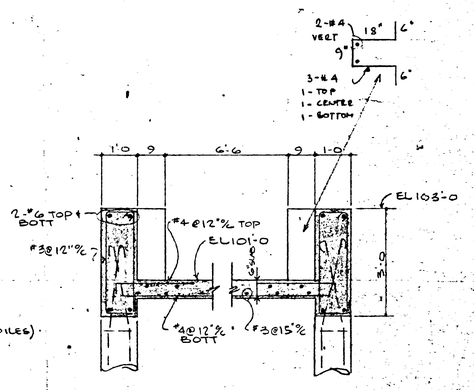

SECTION 10/S3
½" = 1'-0"

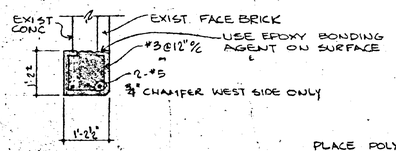

SECTION 11/S3
½" = 1'-0"

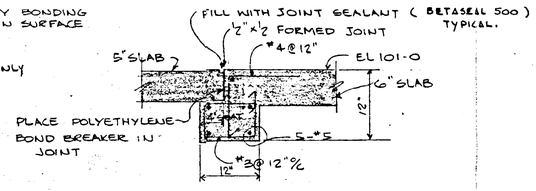

DETAIL A/S3
1" = 1'-0"

MASONRY NOTES : MORTAR TYPE 'S'

B-14
FILE
RETURN TO CIVIC PROPERTIES BUILDING INVENTORY.
3 07 4

NO.	DESCRIPTION	DATE	BY
1	REV TO SECT 3 & 11 DOOR JAMB INCREASED	APR 15/71	DAVE

REVISIONS

CITY OF EAST KILDONAN - MANITOBA

W. L. WARDROP & ASSOCIATES LTD.
ENGINEERING CONSULTANTS
WINNIPEG THUNDER BAY REGINA

EAST KILDONAN RECREATIONAL CENTRE

DETAILS

PROVINCE OF MANITOBA
B. RUZSICSKA
REGISTERED ENGINEER

DESIGNED BY:	DRAWN BY:	CHECKED BY:
BJR	DAVE	MA.

APPROVED BY:

SCALE:	DATE:
AS SHOWN	APR. 14/71

DRAWING NO: 71185-01-S3